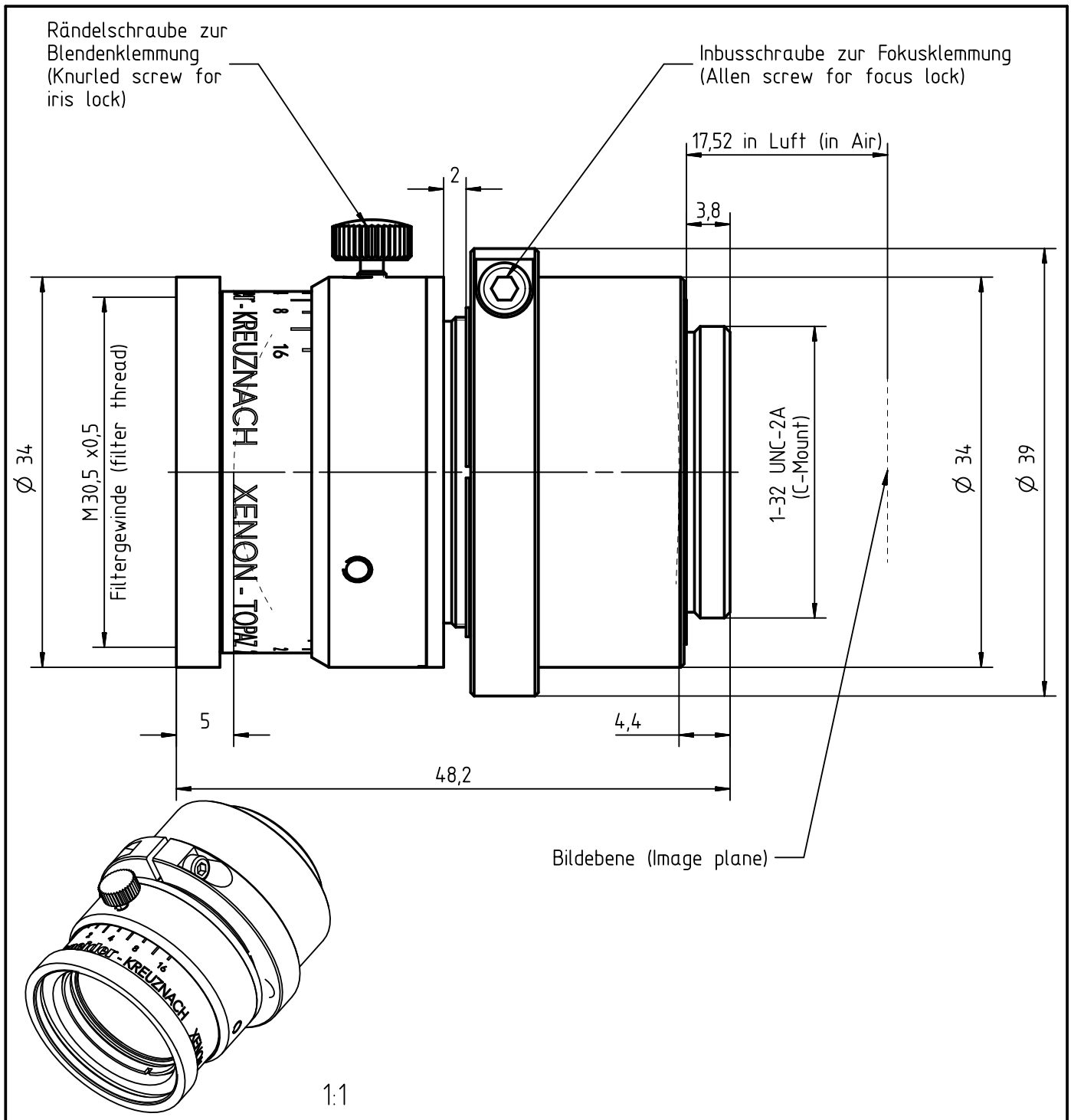

Optische Grunddaten bei λ= 555nm (optical Data at λ= 555nm)

f'	38,01	s'_{AP}	-41,59	Blendenbereich (iris range)	2,0-16
$s'_{F'}$	18,10	β' Bereich (β' area)	0 - 1:26	Blendendurchmesser Nennwert (aperture diameter nominal)	11,1
$s'_{H'}$	-19,92	$β'_P$	1,57	Filtergewinde (Filterthread)	M30,5x0,5
HH'	-19,77	OO' (β'= 1:400)	15067	**Sonstige Angaben (other information)**	
S_1S_k	38,80	s (β'= 1:400)	-15010	Schutzkappe vorn (front lens cap)	30344
s_{EP}	24,85	s'_k (β'= 1:400)	18,17	Schutzkappe hinten (rear lens cap)	30422
Bildkreis (image circle)			17,6	Gewicht (weight)	140 g
Angaben ohne Einheiten in mm (all dimensions without unit in mm)				Bestell- Nr. (order-no.)	1076930

Datum (date)	24.11.15	Nur zur Information (only for information)

Freigabe (release)	
R & D	☒
Production	☒
Sales	☒
VT	☒

XENON Topaz 38mm
XN 2,0/38-0901

Jos. Schneider Optische Werke GmbH
Ringstr. 132 55543 Bad Kreuznach
Germany

Schneider KREUZNACH

Schutzvermerk ISO 16016 beachten.
The reproduction, distribution and utilization of this document as well as the communication of its contents to others without explicit authorization is prohibited. Offenders will be held liable for the payment of damages. All rights reserved in the event of the grant of a patent, utility model or design.